ENJOY YOUR WORK WITH STATE-OF-THE-ART SOLUTIONS

SEMPAL®

SEMPAL S11F

Ultrasonic Water Meter

Data Sheet

Accurate water consumption measurement for water stations, industry, housing, office and public buildings

- ultrasonic transit time principle, no moving parts;
- displaying of errors;
- hourly data history for 70 days;
- daily data history for 1 year;
- Protected against non-authorized access;
- Battery powered;
- long-term;
- bi-directional flow measurement;
- water temperature and pressure measurement;
- free software for remote data collection and analysis

Technical data

Medium temperature range, ºC	0,1...150
Ambient operating temperature, ºC	5...55
Nominal pressure PN, bar	16
Power supply	Battery 3.65 VDC, 1D cell lithium
Battery lifetime	Up to 6 years
Interfaces	RS-232 (builtin), RS-485 and M-Bus (external module)
Display indication	LCD, 8-digit Information: volume, flow rate, mass, medium temperature, errors, date
Material	Flow metering section – stainless steel Meter housing - aluminum alloy Flanges – stainless steel process connection: DIN
Protection class	Sensor electronic IP65 / Sensor IP68
Accuracy class (OIML R49)	1 or 2 (upon customer's request)
Climatic Environment class (OIML R49)	B-C
Pulse outputs	2 puls outputs, max. frequency 100Hz, max. voltage 10V
Design	The calculator and the flow sensor are connected via cable; available configurations with and without temperature and pressure sensors
Pressure sensors	External power, 4-20mA output

DN mm	**Min. flow Q1** m³/h	**Transition flow Q2** m³/h	**Nom. flow Q3** m³/h	**Max. flow Q4** m³/h	**Dynamic range Q3/ Q1**	**Pressure loss Δp at Q3** bar	**Overall length** mm	**Connection on meter**
20	0,06	0,1	6,3	7,9	100	025	160 200	G1B DN20
25	0,10	0,16	12,5	20,0	100	0,25	160 200	G1 DN25
32	0,25	0,4	25	31,3	100	0,30	180 200	M48×2 DN32
40	0,40	0,64	40	50,0	100	0,30	200 220	G2 DN40
50	0,63	1,008	63	78,8	100	0,22	180	DN50
65	1,00	1,60	100	125,0	100	0,22	200	DN65
80	1,60	2,56	160	200,0	100	0,22	210	DN80
100	2,50	4	250	312,5	100	0,22	230	DN100
125	4,00	6,4	400	500,0	100	-	265	DN125
150	6,30	10,08	630	787,5	100	-	315	DN150
200	10,00	16	1000	1250	100	-	540	DN200
250	20	32	2000	2500	100	-	620	DN250
300	25	40	2500	3125	100	-	680	DN300
400	45	72	4500	5625	100	-	820	DN400

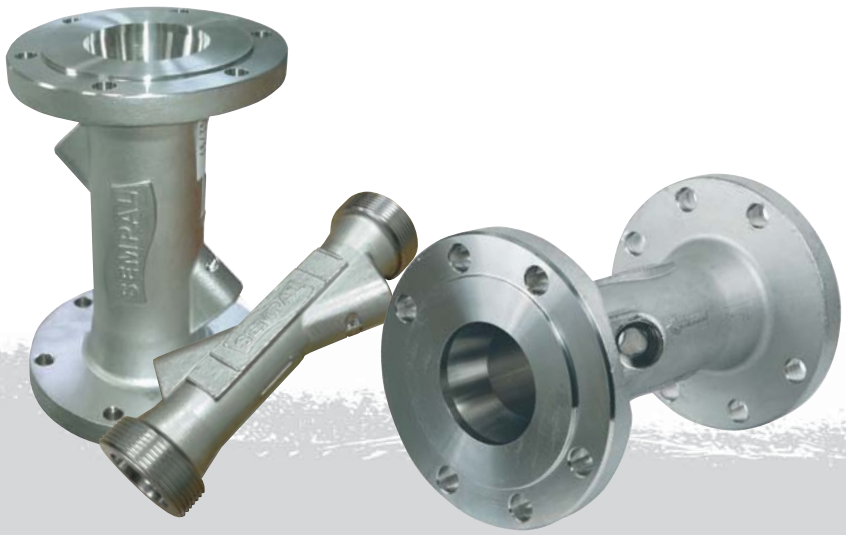

SEMPAL®

Dimensioned sketches

Standart size	L	L_1	d	d_1	l	l_1	G	s	note
DN 20	160	280	20	25	59	59	G1″-A	41	
DN 25	160	509	23	31	230	115	G11/4″-A	50	

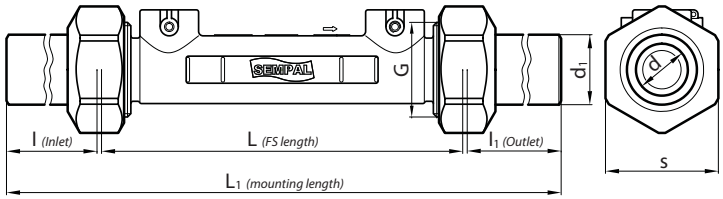

Standart size	L	L_1	d	d_1	l	l_1	G	s	A	note
DN 32	180	662	320	160	32	38	M48x2	55	79	2%
		992	480	230						1%
DN 40	200	802	400	200	23	31	G2″-A	70	85	2%
		1102	600	300						1%

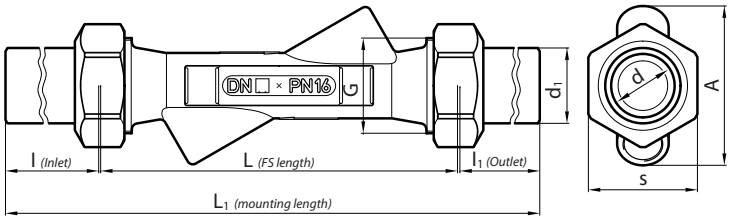

DN	d	D	D_1	L	L_1	**Bolt** M10x50 (items per flange) quantity	note
50	50	122	87	180	230	6	
65	65	144	109	200	250		
80	80	155	120	210	260		
100	100	184	149	230	280	8	see fig. 2

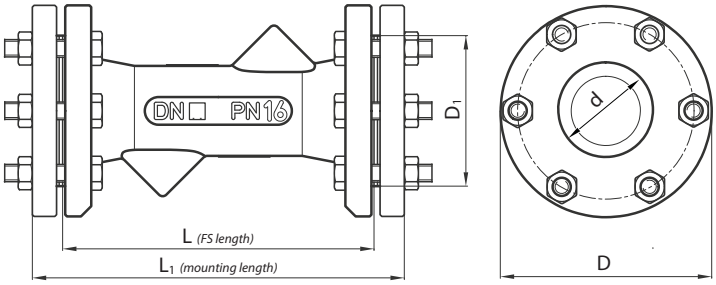

FS-100 flange view

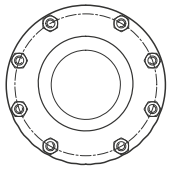

Standart size		d	D	D_1	L	L_1	**Bolt** (items perflange)		note
DN	**PN**						size	quantity	
125	**16**	119...131	210	175	265	274	M10x50	10	
150		143...156	236	195	315	359	M12x50		

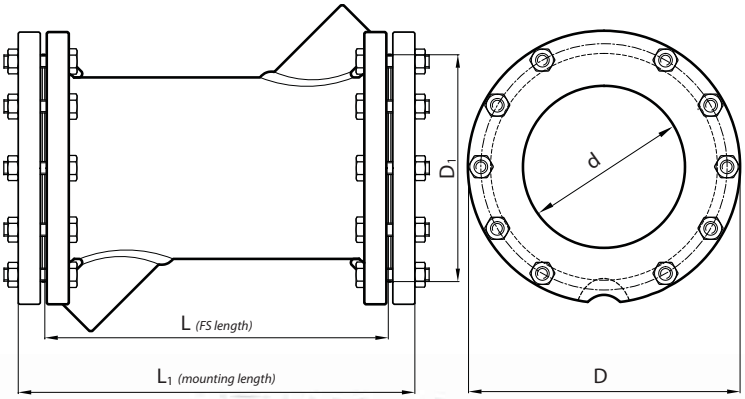

Standart size		d	D	D_1	L	L_1	A	d_1	Bolt (items perflange)		Eyebolt (2 items)	note
DN	PN								size	quantity		
200	16	205	335	295	540	598	111	22	M20x90	12	M12xH7	
250		255	405	355	620	680	140	26	M24x100			
300		310	460	410	680	740	168					
350		360	520	470	740	804	195			16		
400		410	580	525	820	892	220	30	M27x110			

1 - path flow measuring sections (FS)

Fig. 1. Embodiments (1&2) FS-200...1000 with standby flow sensors (FIS)

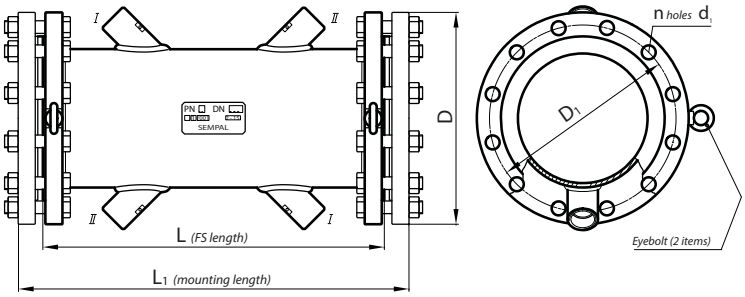

Fig. 2. Embodiment FS-200...1000 with flow sensors lock chamber (FIS)

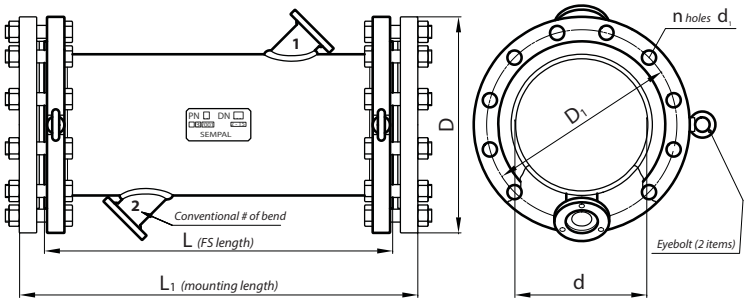

2 - path flow measuring sections (FS)

Fig. 1. Embodiments (4&5) FS-200...1200 with standby flow sensors (FIS)

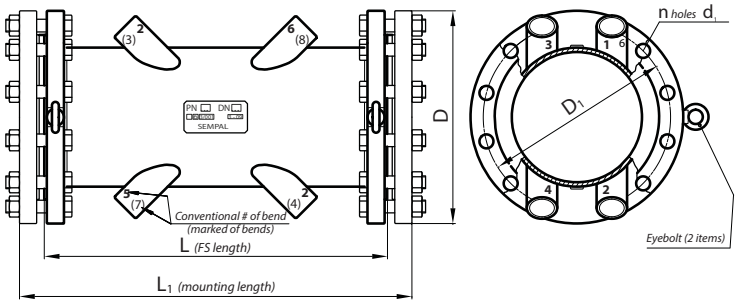

Fig. 2. Embodiments (6) FS-200...1200 with FIS with chamber gate

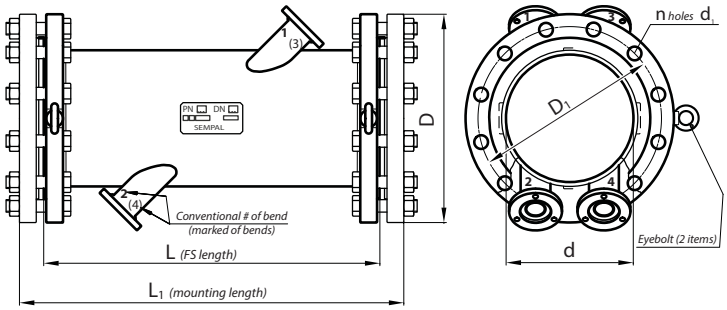

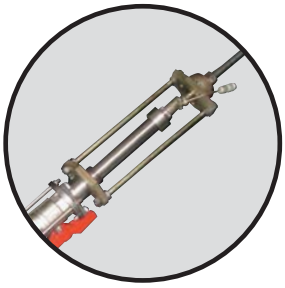

The assembly is designed for the removal of the flow sensors (when it is needed), their repair, replacement, or cleaning without dewatering the pipe

Ultrasonic flow sensors made of high-strength titanium:

- high measuring accuracy impurities in water
- self-cleaning from rust in water

Flow sensors with encapsulation for moisture protection and against mechanical distortions

SEMPAL®

SEMPAL Co. Ltd
11, Kulibina St., 03062, Kyiv, Ukraine
+38 044 337 11 88; +38 044 355 11 88
+38 098 163 88 88; +38 050 142 88 88
info@sempal.com, www.sempal.com